HYDROPOWER PUMPING TECHNOLOGY

DESIGN AND PERFORMANCE OF A DOUBLE-ACTING HYDRO-POWERED PISTON WATER PUMP SYSTEM

TIRAWAT WONGSATIAM
SAMERKWAN TANTIKUL

SCHOOL OF RENEWABLE ENERGY
MAEJO UNIVERSITY



THE PROBLEM


ชุมชน Off-grid พื้นที่สูง |
ปัญหา: ต้นทุนพลังงาน (20-30%)
น้ำมัน & เสียง/มลพิษ
DIESEL

THE PROBLEM



FUEL COSTS **48,000 BAHT/YEAR**

ELECTRICITY **24,000 BAHT/YEAR**

REF. กรมพัฒนาพลังงานทดแทนฯ (2568)

THE CONCEPT:



กังหันน้ำชัยพัฒนา
Chaipattana Aerator

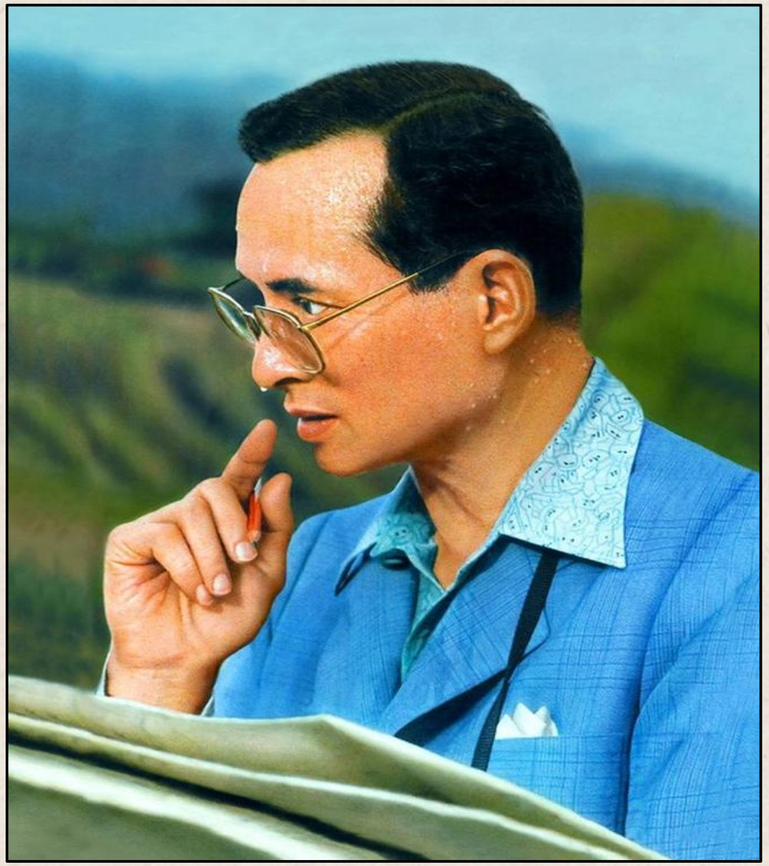

พระบาทสมเด็จพระบรมชนกาธิเบศร
มหาภูมิพลอดุลยเดชมหาราช บรมนาถบพิตร
King Bhumibol Adulyadej (Rama IX)

PREVIOUS RESEARCH



SPIRAL HYDRO-POWERED WATER PUMP MODEL 1



SINGLE-ACTING HYDRO-POWERED PISTON WATER PUMP MODEL 2



DOUBLE-ACTING HYDRO-POWERED PISTON WATER PUMP MODEL 3

THE CONCEPT:

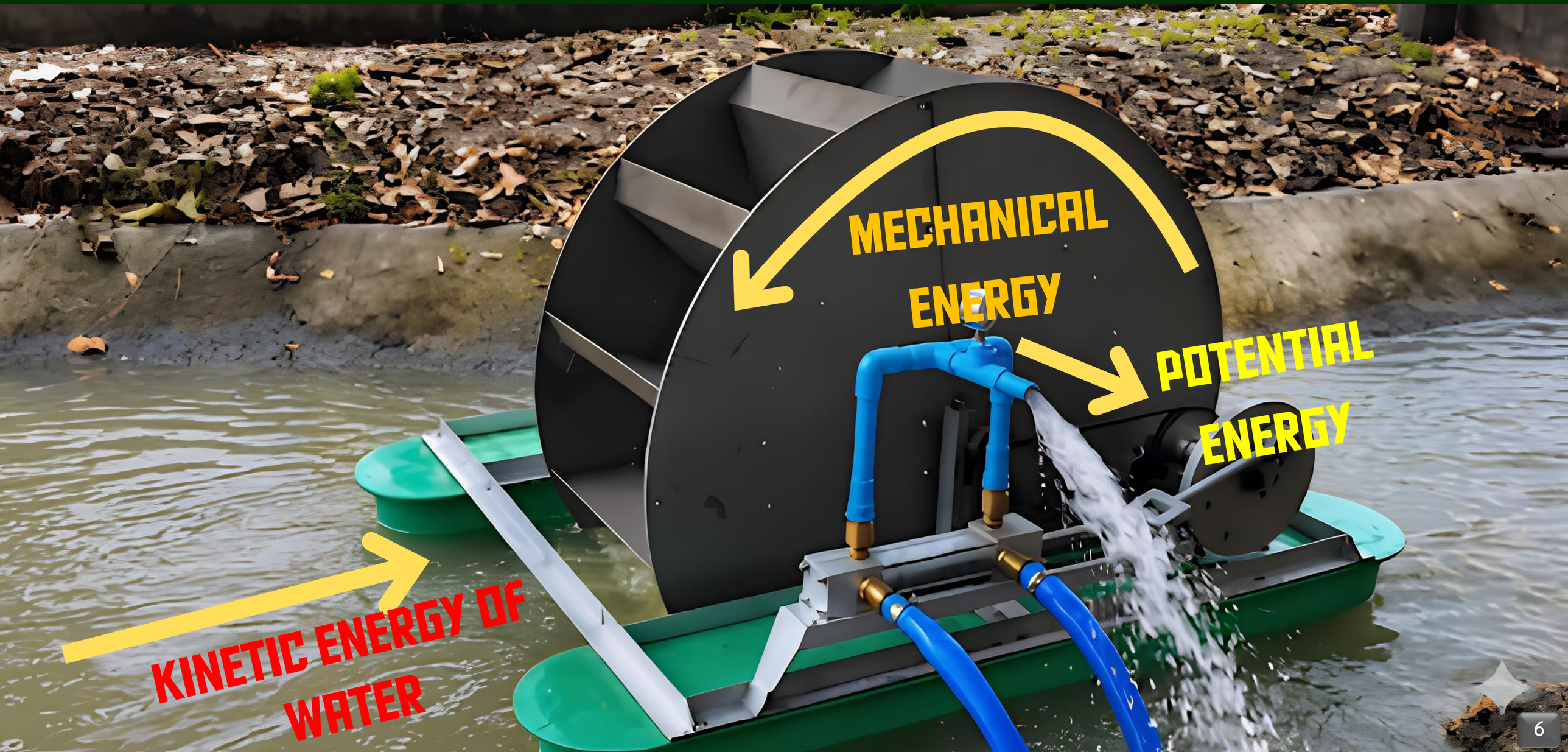
MECHANICAL ENERGY
POTENTIAL ENERGY
KINETIC ENERGY OF WATER

Structure and Components

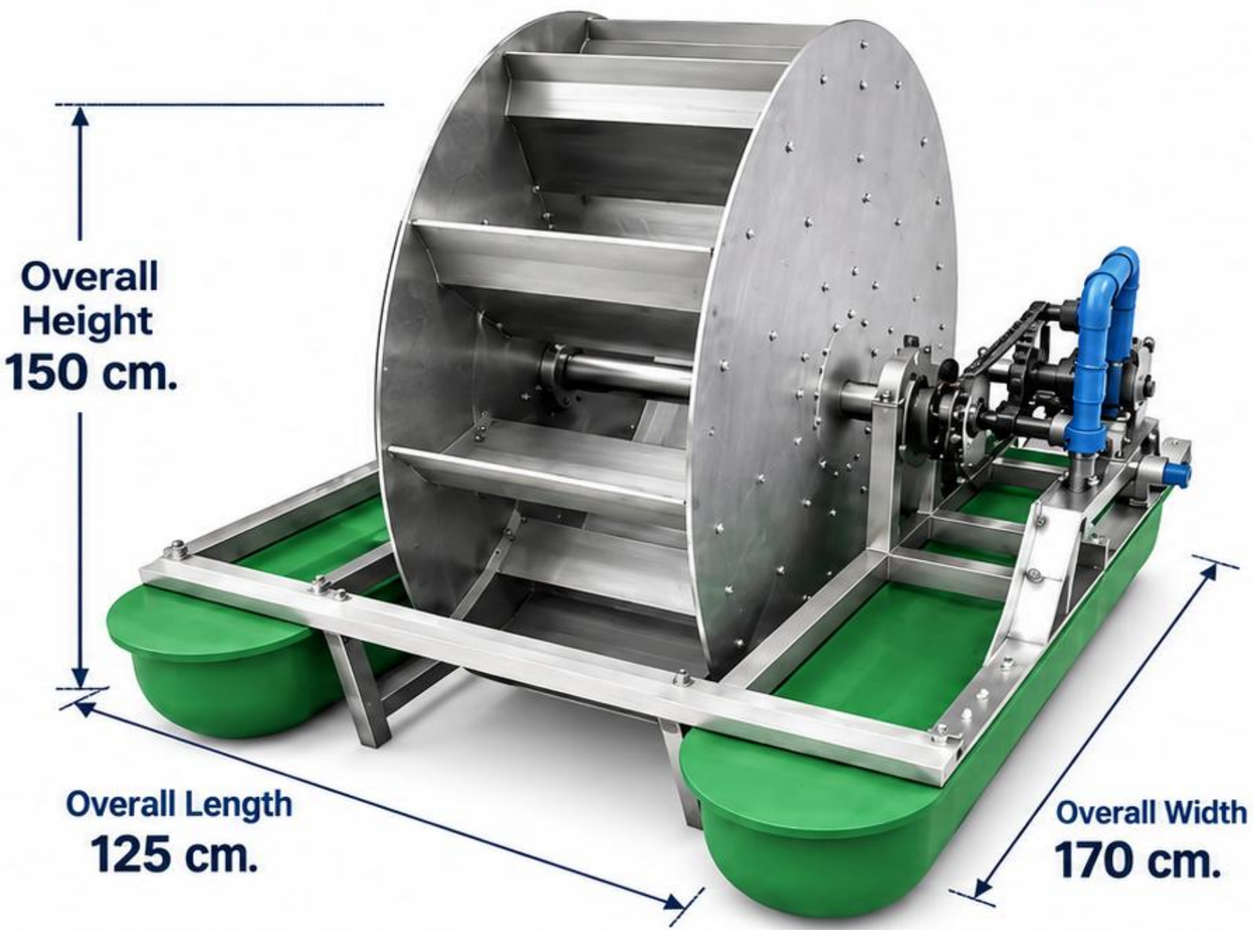

1. Water Blade

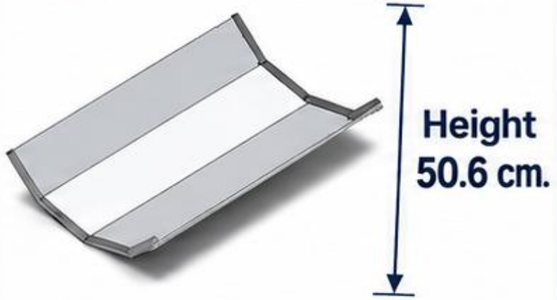

Total of Water Blades
12 Pieces
Material: Aluminium

2. Turbine Wheel



Diameter
120 cm.
Thickness : 2 mm.
Material: Aluminium

3. Base Frame



4. Float

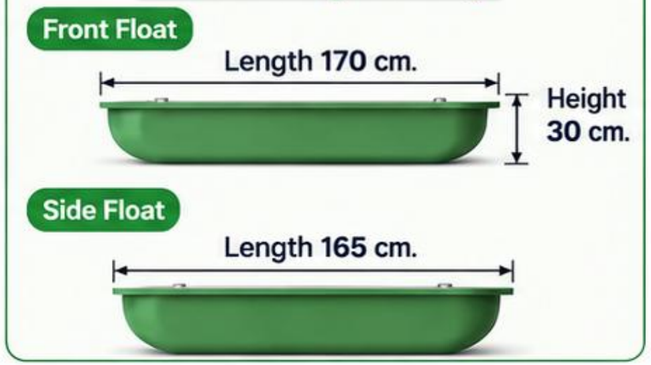

Power Transmission

1 Drive Sprocket (Driving Sprocket)



Transmits power from the motor to the chain

2 Roller Chain (Roller Chain)

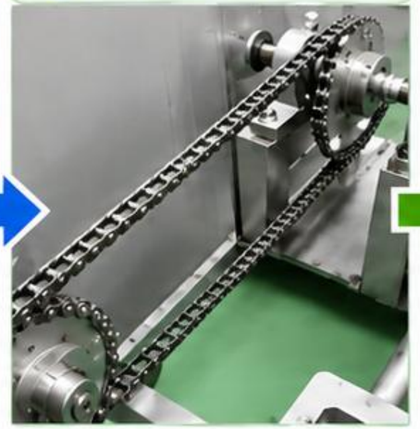

Transfers motion between sprockets with smooth and reliable operation

3 Driven Sprocket (Driven Sprocket)



Receives motion from the chain and drives the output mechanism

4 Crank Disc (Crank Disc)



Converts rotary motion into reciprocating motion for linear movement

5 Crank Pin (Crank Pin)

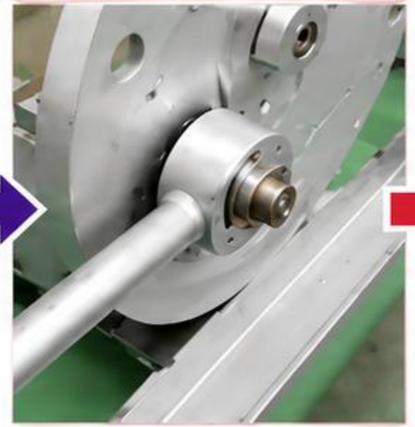

Connects the crank disc with the connecting rod (Stroke arm) to transfer motion

6 Connecting Rod (Scotch Yoke)

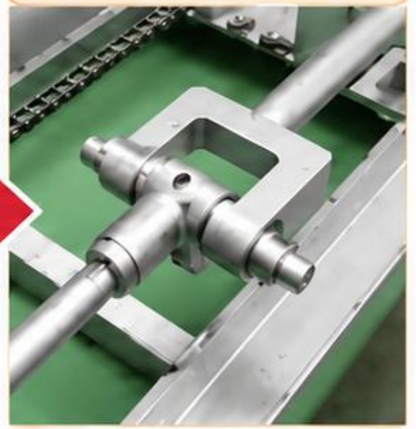

Converts rotary motion into linear motion to drive the conveyor mechanism

Summary of Operation

Drive Sprocket → Roller Chain → Driven Sprocket → Crank Disc → Crank Pin → Connecting Rod

Convert the turbine's rotation into linear motion to drive the water pump

SOLUTIONS

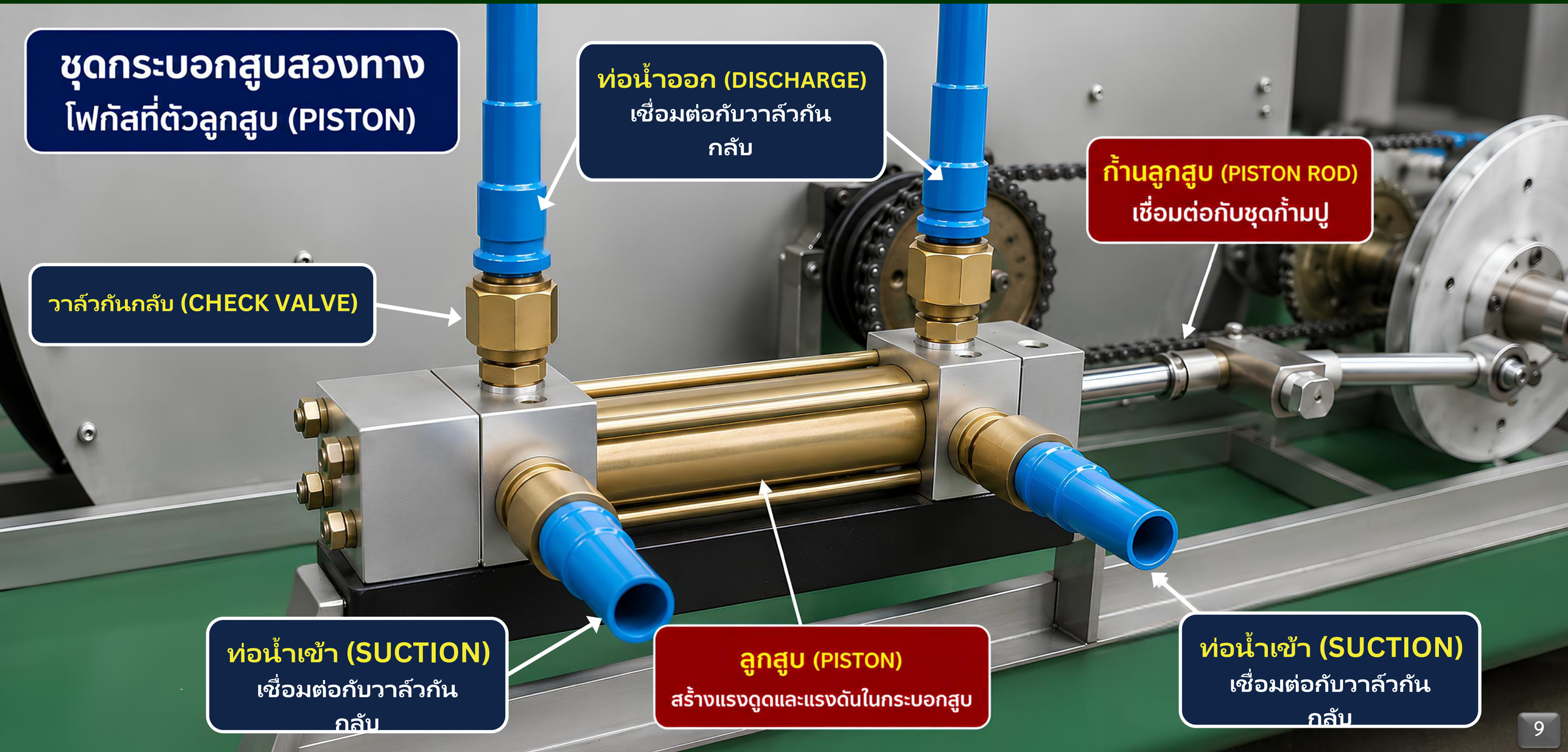
ชุดกระบอกสูบสองทาง
โฟกัสที่ตัวลูกสูบ (PISTON)
ท่อน้ำออก (DISCHARGE)
เชื่อมต่อกับวาล์วกันกลับ
ก้านลูกสูบ (PISTON ROD)
เชื่อมต่อกับชุดก้ามปู
วาล์วกันกลับ (CHECK VALVE)
ท่อน้ำเข้า (SUCTION)
เชื่อมต่อกับวาล์วกันกลับ
ลูกสูบ (PISTON)
สร้างแรงดูดและแรงดันในกระบอกสูบ
ท่อน้ำเข้า (SUCTION)
เชื่อมต่อกับวาล์วกันกลับ

SOLUTIONS

PISTON FORTH STROKE

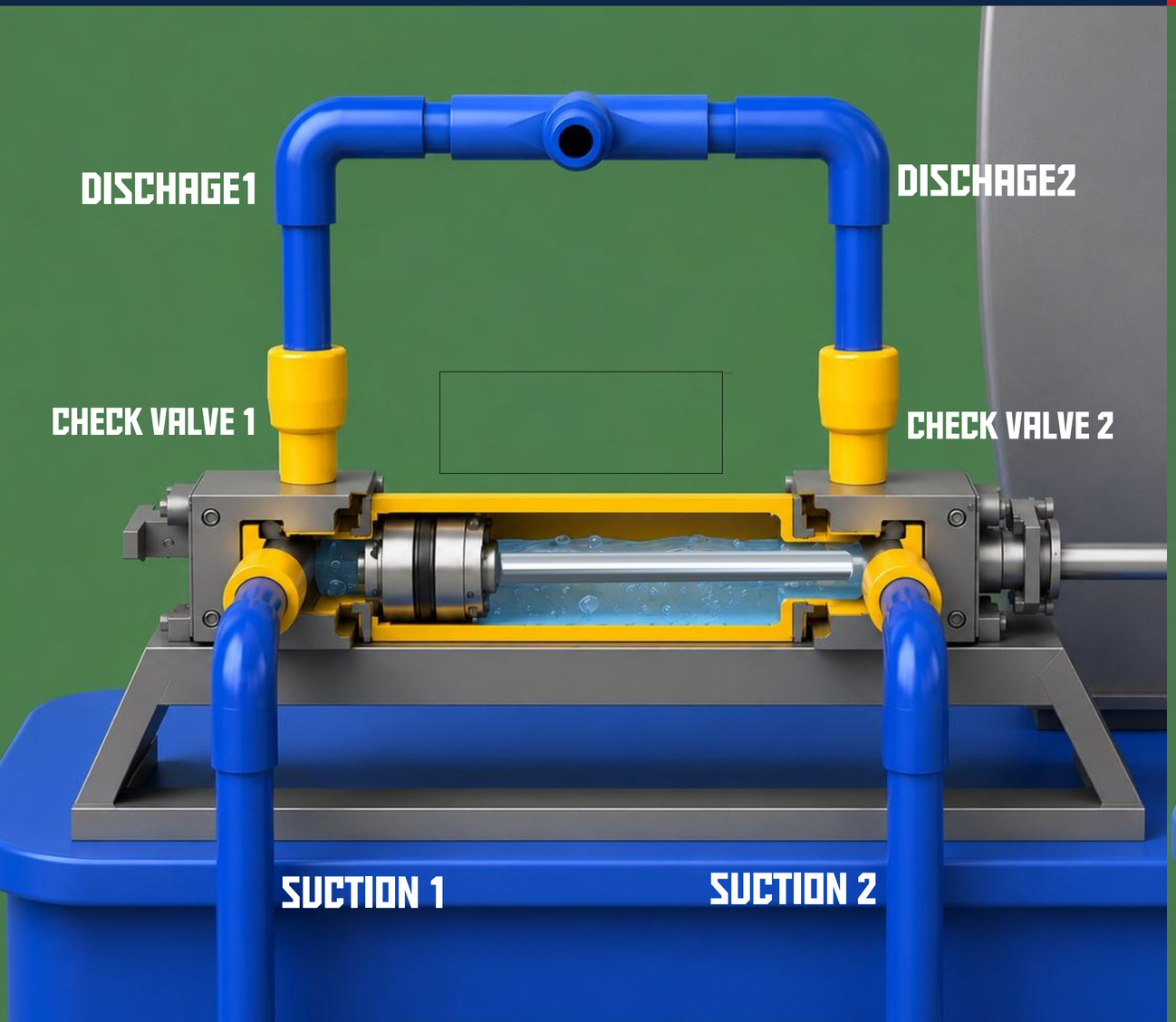

PISTON BACK STROKE

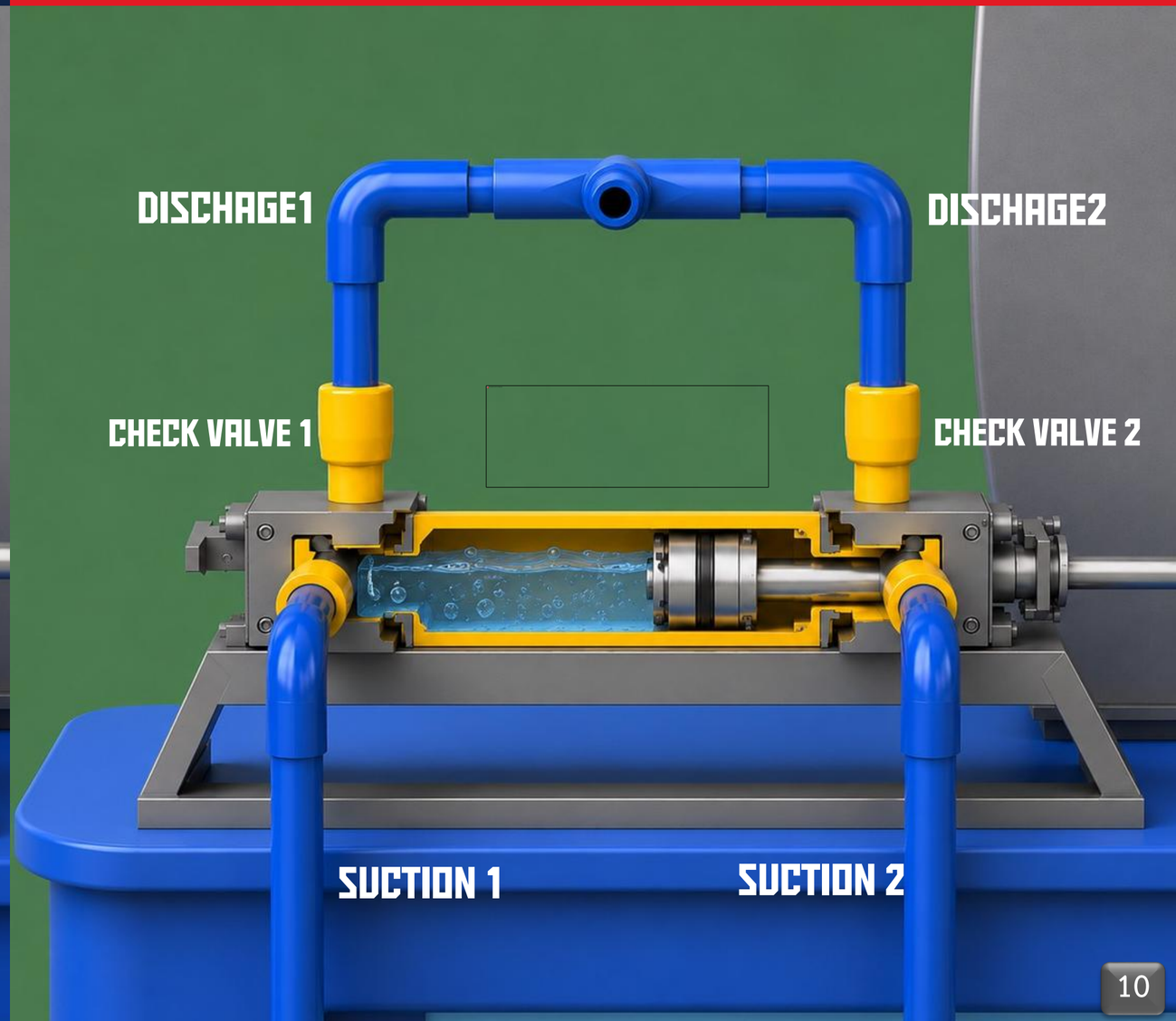

SOLUTIONS



TESTING





TESTING THE GEAR RATIO AT MAEJO UNIVERSITY

1:1



HIGHEST FLOW RATE

1:1.5



1:2



HIGHEST PRESSURE

PRACTICAL APPLICATION

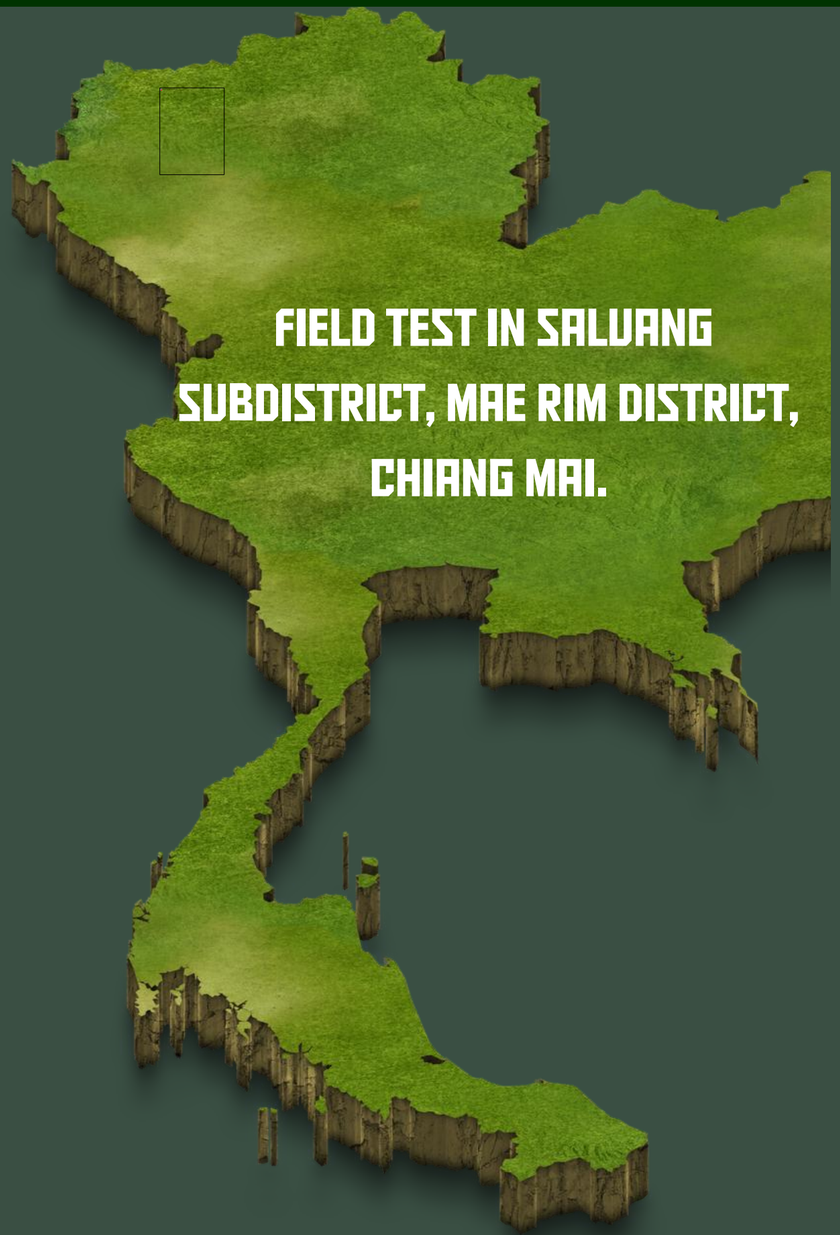

FIELD TEST IN SALUANG SUBDISTRICT, MAE RIM DISTRICT, CHIANG MAI.







PERFOMANCE

TEST RESULTS

DOUBLE-ACTING HYDRO-POWERED PISTON WATER PUMP

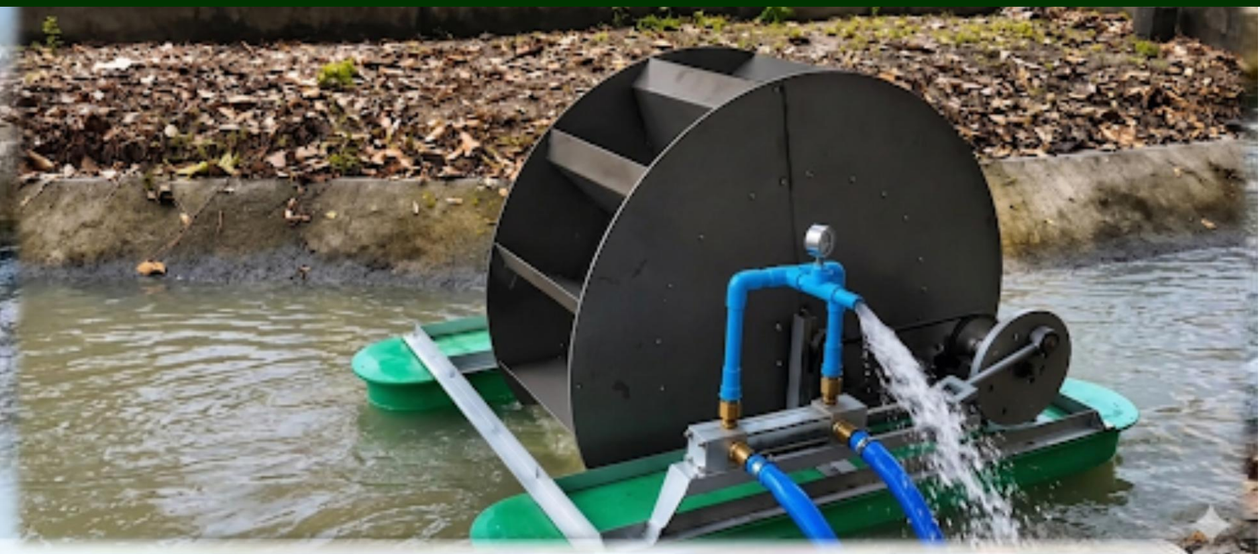

Experiments with a water pump operating at a water flow speed of 7.1 km/hr showed that:

Head Height from Water Level (muters)	Shaft Rotation Speed (RPM)	Water Flow Rate (Liters/Hour)	Total Daily Water Volume (Liters)
0	24	1342.02	32209.48
6	22	1249.91	29997.84
10	20	699.06	16777.44

The pump is capable of delivering water up to 60 meters or an equivalent pressure of 6 bar

PRACTICAL APPLICATION

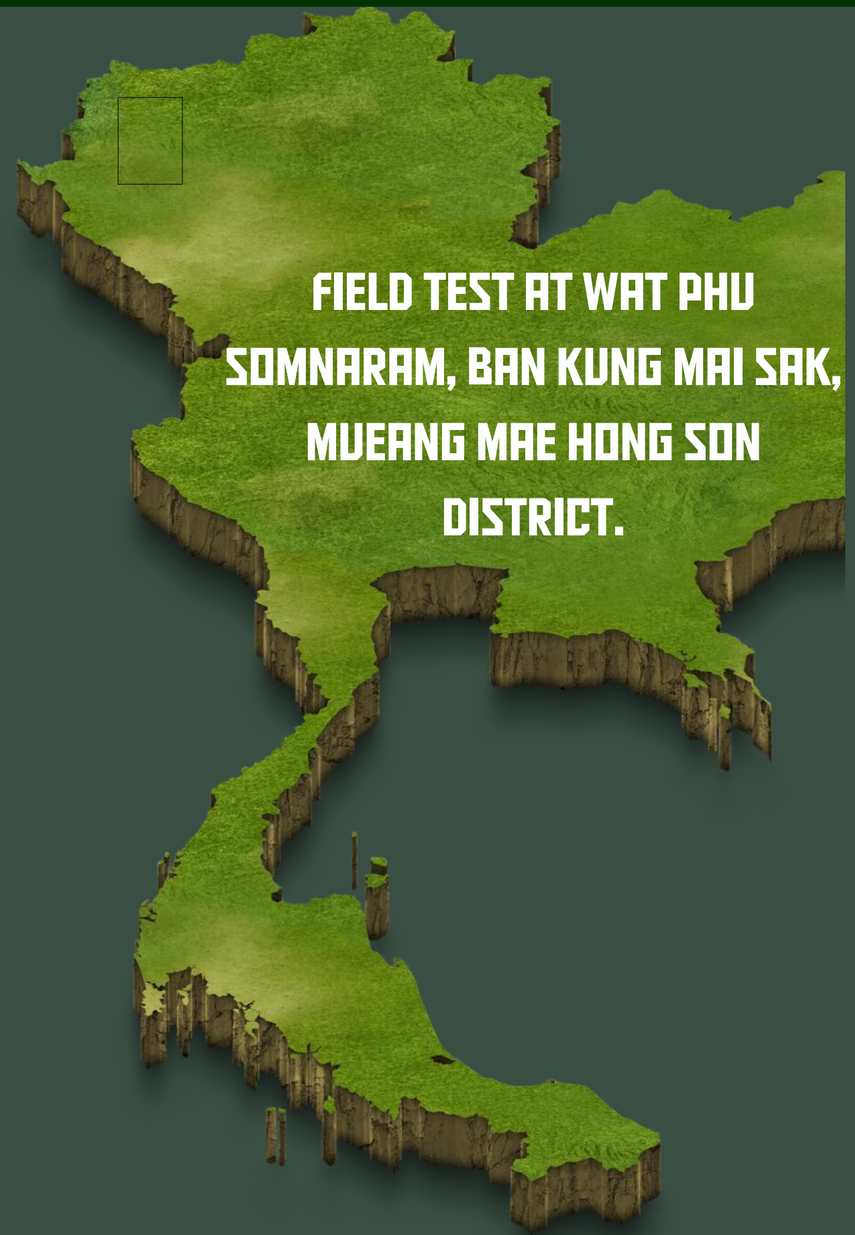

FIELD TEST AT WAT PHU SOMNARAM, BAN KUNG MAI SAK, MUEANG MAE HONG SON DISTRICT.





IMPACT



GREENHOUSE GASES = 0

REDUCE CO_2 = 2.57 TONS/YEAR

EQUIVALENT TO 266 TREES PER YEAR

MEETS THE GLOBAL SDG GOALS 6, 7, AND 13

BCG & SUFFICIENCY ECONOMY



CIRCULAR ECONOMY

BIO ECONOMY

GREEN ECONOMY

COMPARISON



ELECTRIC WATER PUMP



DIESEL WATER PUMP



GASOLINE WATER PUMP



DOUBLE-ACTING PISTON WATER PUMP

Comparison table of energy costs for different types of water pumps

ITEMS	Electric Water Pump	Diesel Water Pump	Gasoline Water Pump	DOUBLE-ACTING PISTON WATER PUMP
Required Power Capacity	1.5 - 2 hp mooor	5.5 - 8 hp diesel engine	5.5 - 6 hp gasoline engine	2-Way Flow Piston Pump
Starting Eqinsment Budget	3,500 - 7,000 Baht	12,000 - 25,000 Baht	3,500 - 6,500 Baht	35,000 Baht
Hourly Energy Consumption Rate	1.5 Units (kWh)	1.2 liters	1.5 - 2.0 liters	(Uses water flow energy; No llewtrilty or fuel cost)
Energy Cost / Hour (Baht/Hour)	6.3 Baht	50.4 Baht	88 Baht	0 Baht
Energy Cost / 30,000 Liters of Water	56.7 Baht	75.6 Baht	132 Baht	0 Baht
Maintenance Cost / Year	500 - 1,000 Baht	1,500 - 3,000 Baht	1,000 - 2,000 Baht	500 Baht
Total First-Year Cost	24,695 - 28,695 Baht	41,094 - 55,594 Baht	149,040 - 153,040 Baht	35,500 Baht
Total 10-Year Duration Cost	215,454 - 223,954 Baht	302,940 - 330,940 Baht	591,660 - 604,660 Baht	40,000 Baht

Costs decreased → **170,000** **290,000** **560,000**

CURRENTLY

THE PATENT APPLICATION IS CURRENTLY BEING DRAFTED

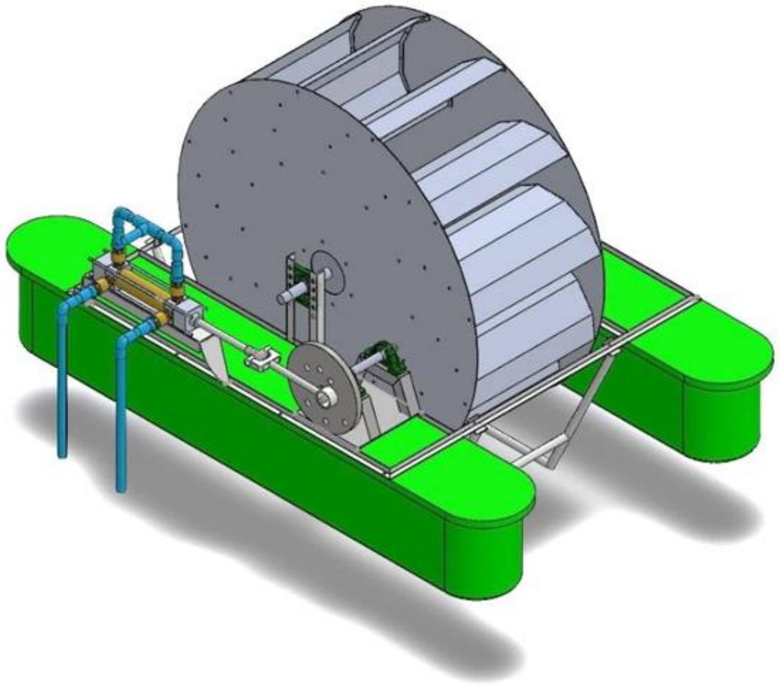








THANK YOU FOR YOUR ATTENT